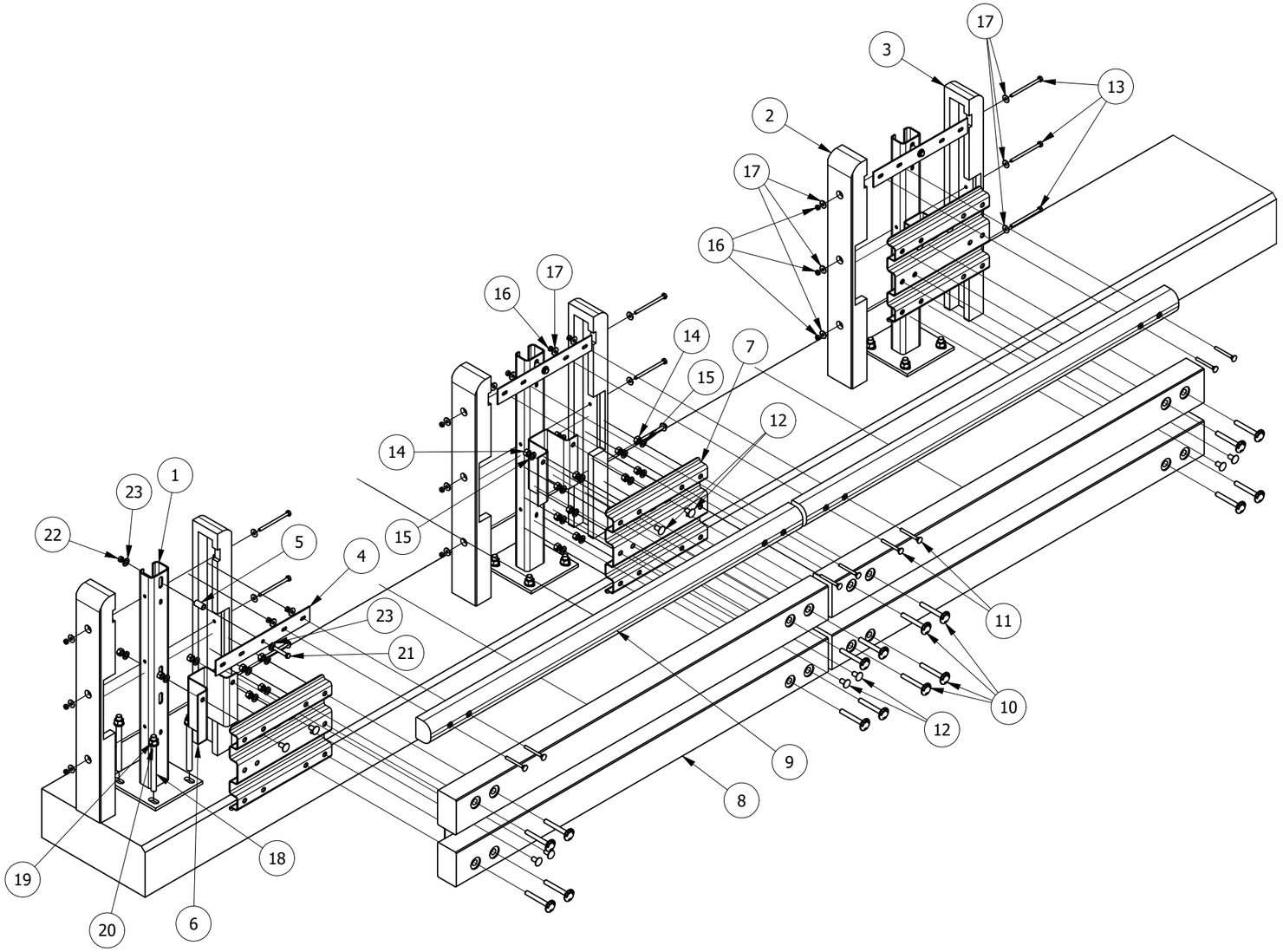

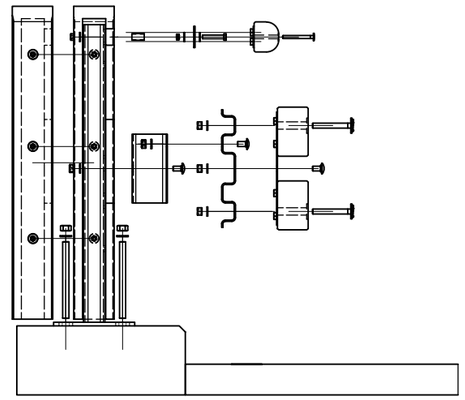

COMPONENTS LIST			
Ref.	Item	Drawing	Material
1	"C" Post	E PdP 08/14 06	Steel S355J0WP
2	Left post cover	E PdP 01/04 03	Laminated wood GL24H
3	Right post cover	E PdP 01/04 02	Laminated wood GL24H
4	Splice plate for top rail	E PdP 01/04 06	Steel S355J0WP
5	Galvanized tube		
6	Blockout	E PdP 02/00 04	Steel S355J0WP
7	Corrugated Splice Plate	E PdP 02/00 05	Steel S255J0WP
8	Protection rail	E PdP 02/00 06 E PdP 02/00 07	Steel S355J0WP Laminated wood GL24H
9	Top rail	E PdP 01/04 05 E PdP 01/04 04	Steel S355J0WP Laminated wood GL24H
10	Bolts TTQST M16x125		Class 8.8
11	Bolts TTQST M10x100		Class 8.8
12	Bolts TT M16x30		Class 8.8
13	Bolts TE M10x150		Class 8.8
14	Hex Nut M16		
15	Flat washer M16		
16	Hex Nut M10		
17	Flat washer M10		
18	Threaded rods M20x250		Class 6.8
19	Hex Nut M20		
20	Flat washer M20		
21	Bolts TE M12x70		Class 8.8
22	Hex Nut M12		
23	Flat washer M12		

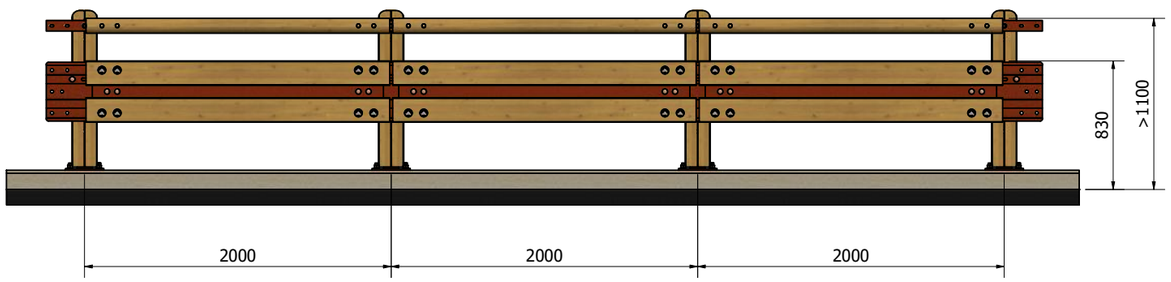

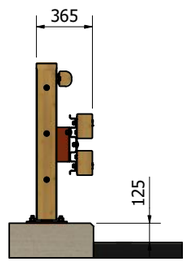

MARGARITELLI
ROAD SAFETY

Drawing	Issued
E PdP 01/04 Esp	07/02/2020
Review	**Date**
01	30/06/2022

Object: Bridge Side Safety Barrier H2BP-01
Certificate of Costancy of Performance CE n° 0497/CPR/3153
Exploded view

Proprietà di Margaritelli Ferroviaria SpA - Via Adriatica 109 - 06135 Ponte San Giovanni - Perugia